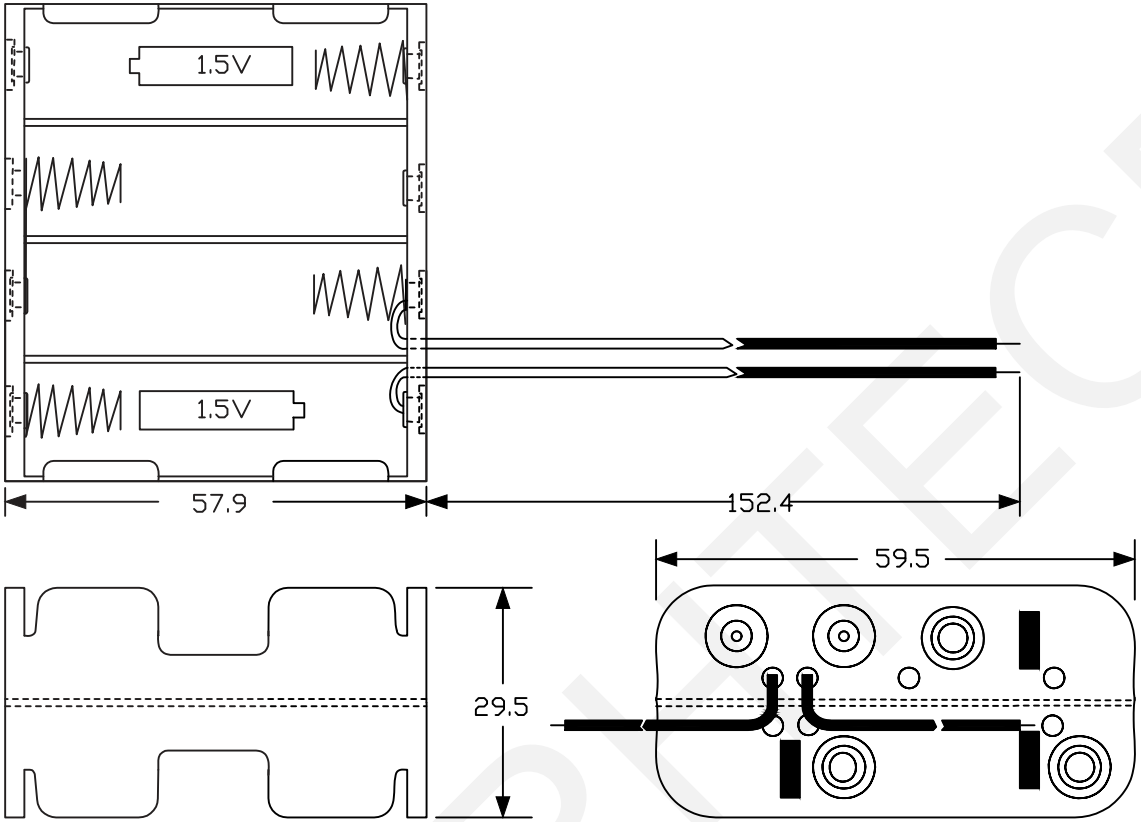

WIRE LEADS SHOWN ABOVE

WIRE:UL 1007, # 26 AWG
BLACK&RED: 150MM±5MM
STRIP&TIN: 5MM±1MM
MATERIAL: A. B. S. RESIN BLACK COLOR
SPRING: .6 MM 65C SPRING WIRE
DESCR.: FOR ONE "AA" CELLS

ORDER INFORMATION
Product NO.:RE-BH-816-B

Cell Box Series
TYPE:
A:With Soldered lug
B:With Wire L=15cm or other
C:With 6 Prong

RHTECP

RHTECP NINGBO RHT ELECTRONIC CO.,LTD	UNITS:mm	SHEET SIZE: A4	SCALE:---	DRWN BY PAN	UM-3 OR"AA"Cell Box Series	
	0~3	3~18	18~50	50~120	CHK'D BY FENG	THIRD ANGLE PROJECTION
	±0.12	±0.15	±0.3	±0.5	APPR BY ZHAN	RE-BH-816-B

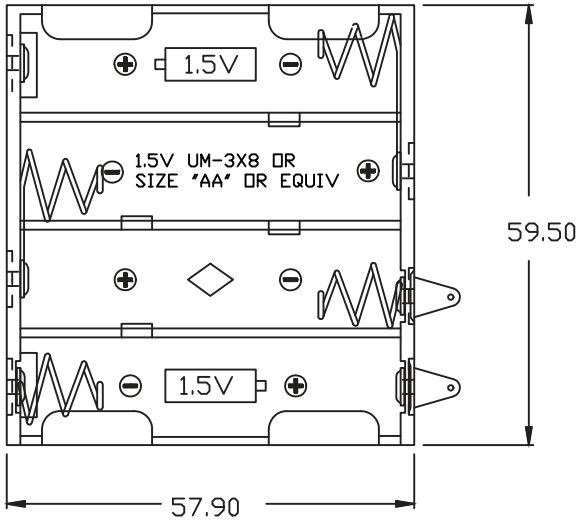

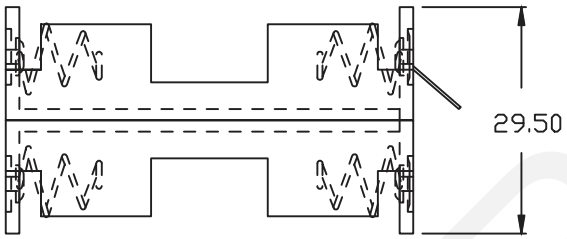

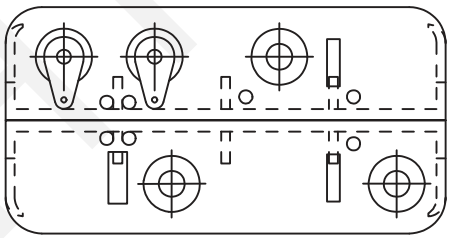

WIRE:UL 1007, # 26 AWG
BLACK&RED: 150MM±5MM
STRIP&TIN: 5MM±1MM
MATERIAL: A. B. S. RESIN BLACK COLOR
SPRING: .6 MM 65C SPRING WIRE
DESCR.: FOR ONE "AA" CELLS

ORDER INFORMATION
Product NO.:RE-BH-816-A

Cell Box Series
TYPE:
A:With Soldered lug
B:With Wire L=15cm or other
C:With 6 Prong

RHTECP

RHTECP NINGBO RHT ELECTRONIC CO.,LTD	UNITS:mm	SHEET SIZE: A4	SCALE:---	DRWN BY PAN	UM-3 OR"AA"Cell Box Series	
	0~3	3~18	18~50	50~120	CHK'D BY FENG	THIRD ANGLE PROJECTION
	±0.12	±0.15	±0.3	±0.5	APPR BY ZHAN	RE-BH-816-A

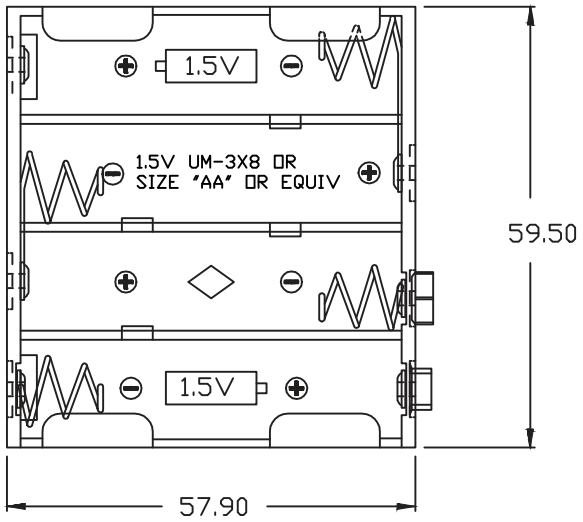

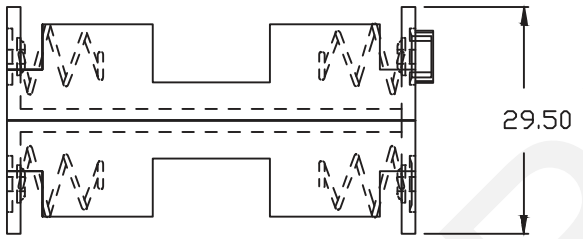

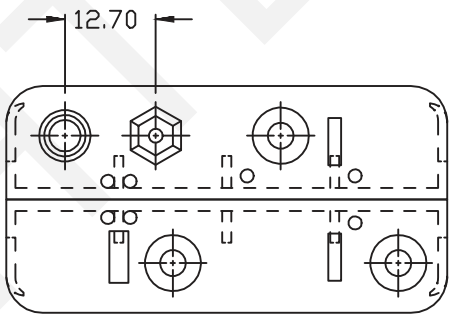

WIRE:UL 1007, # 26 AWG
BLACK&RED: 150MM±5MM
STRIP&TIN: 5MM±1MM
MATERIAL: A. B. S. RESIN BLACK COLOR
SPRING: .6 MM 65C SPRING WIRE
DESCR.: FOR ONE "AA" CELLS

ORDER INFORMATION
Product NO.:RE-BH-816-C

Cell Box Series
TYPE:
A:With Soldered lug
B:With Wire L=15cm or other
C:With 6 Prong snap

RHTECP

RHTECP NINGBO RHT ELECTRONIC CO.,LTD	UNITS:mm	SHEET SIZE: A4	SCALE:---	DRWN BY PAN	UM-3 OR"AA"Cell Box Series
	0~3	3~18	18~50	50~120	CHK'D BY FENG
	±0.12	±0.15	±0.3	±0.5	APPR BY ZHAN
	THIRD ANGLE PROJECTION				RE-BH-816-C