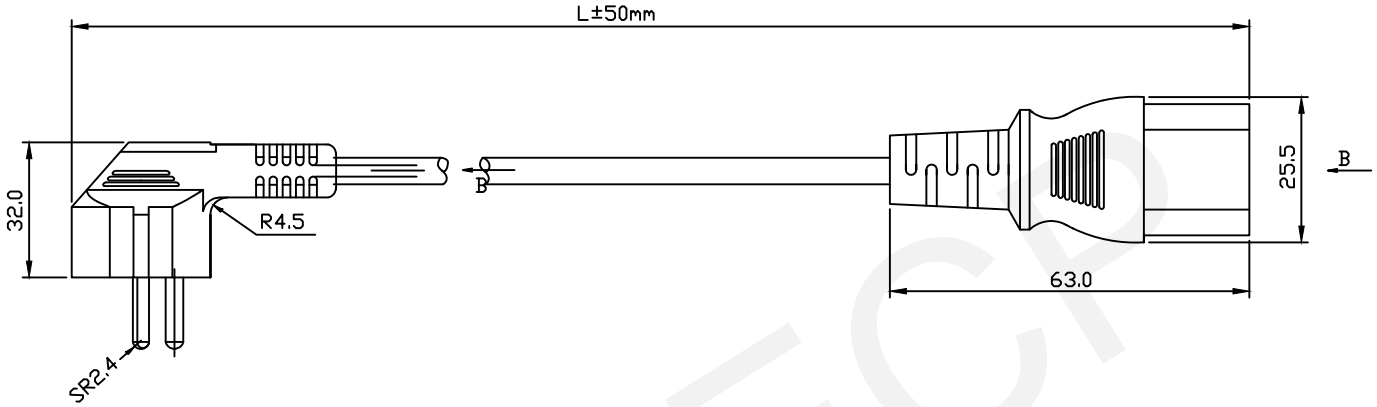

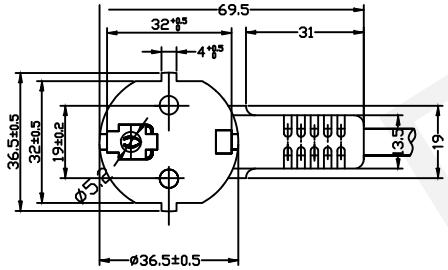

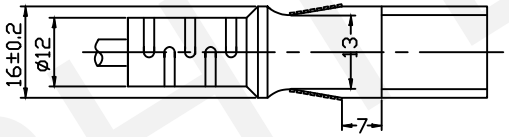

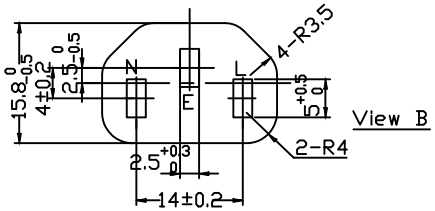

Note:

1:Mater: 1- Male Plug:Europe CEE7/7 Schuko

2- Female Receptacle:IEC 60320 C13

3-Cable: H05VV-F 3G0.75-1.5

2: Rated: 10A 250V AC

3:Certifications: VDE

4:Testing :100% are individually tested

5:Order Information

RHTGYAB-EU01-1500B375

Cable Length:1500= 1500mm; 1800=1800mm

Cable Color: B=Black GR=Gray

Cable type: 375: H05VV-F 0.75mm²/3G

310: H05VV-F 1.0mm²/3G

315: H05VV-F 1.5mm²/3G

RHTECP NINGBO RHT ELECTRONIC CO.,LTD	UNITS:mm	SHEET SIZE: A4	SCALE:---	DRWN BY PAN	Europe Power Cable	
	0~3	3~18	18~50	50~120	CHK'D BY FENG	THIRD ANGLE PROJECTION
	±0.12	±0.15	±0.3	±0.5	APPR BY ZHAN	RHTQYAB-EU01-XXX