NINGBO RHT ELECTRONICCO.,LTD

0.25A~8A 63Vdc/32Vdc

Description

- 1.6x0.81x0.65mm physical size
- Solder-free design
- Designed to UL248-1
- RoHS compliant,Halogen free and Lead-free

Dimensions

(Unit: mm)

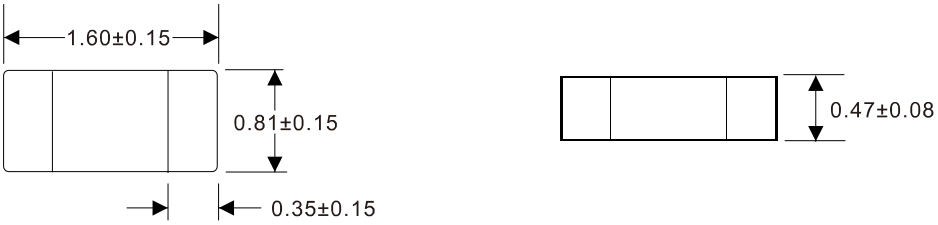

Specifications

Part No.	Rated Voltage (Vdc)	Rated Current (A)	Breaking Capacity (A)	Typical Cold Resistance (mOhms)	Typical Voltage Drop (mV)	Typical Pre-Arcing I^2t (A^2Sec)	Marking
06F-0250L	63 32	0.25	50A	3100	1435	0.0012	D
06F-0375L		0.375		1600	1250	0.0028	E
06F-0500L		0.5		1000	750	0.005	F
06F-0750L		0.75		440	550	0.015	G
06F-010L		1		257	390	0.02	B
06F-015L		1.5		137	320	0.07	H
06F-020L		2		70.5	220	0.14	K
06F-025L		2.5		52	200	0.25	L
06F-030L		3		34	155	0.30	O
06F-035L	32	3.5		23	135	0.50	R
06F-040L		4		20.5	130	0.80	S
06F-050L		5		13.25	115	1.6	T
06F-060L		6		8.9	100	2.6	V
06F-070L		7		6.95	95	3.3	X
06F-080L		8		5.43	90	4.5	Z

* DC Interrupting Rating (Measured at rated voltage, time constant of less than 50 microseconds, battery source)
* DC Cold Resistance are measured at <10% of rated current in ambient temperature of 25 degrees
* Typical Pre-arcing I^2t are measured at 10In Current
* For fuse below 1A, the color of glass coating is Blue; for 1A and above, it' s Green.

Electrical Characteristcs

Rated Current	1.0In	2.0In	2.5In	3.5In
250mA~750mA	4.0 hour min	60 sec-max	5.0 se-c max	·
1~5A	4.0 hour min	60 sec max	5.0 sec max	·
6~7A	4.0 hour min		5.0 se-c max	·
8A	4.0 hour min	-	5.0 sec max	·

0.25A~8A 63Vdc/32Vdc

Installation Recommendations

1 Wave Soldering Parameters

Reflow Conditon		Pb-free assembly
Pre Heat	- Temperature Min ($T_{s(min)}$)	150°C
	- Temperature Max ($T_{s(max)}$)	200°C
	- Time (Min to Max) (t_s)	60 – 120 seconds
Average Ramp-up Rate (Liquidus Temp (TL) to peak)		3°C/second max.
TS(max) to TL - Ramp-up Rate		5°C/second max.
Reflow	- Temperature (TL) (Liquidus) - Temperature (tL)	217°C 60 – 150 seconds
Peak Temperature (T_P)		260+0/-5°C
Time within 5°C of actual peak Temperature (t_P)		30 seconds
Ramp-down Rate Time 25°C to peak Temperature (T_P) Do not exceed		6°C/second max 8 minutes max. 260°C

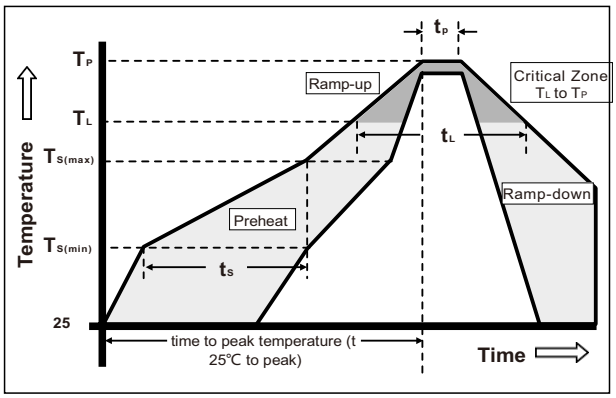

Solder Pot Temperature: 260°C max Solder

Dwell Time: 10 Seconds max

2 Hand-Solder Parameters

Solder Iron Temperature: 280±5°C Heating Time:

5 Seconds min

Generally,hand-soldering is not recommended

Product Characteristics

Materials	Body: Ceramic Terminatons: Silver over-plated with tin Element: Alloy(Ag,Cu,Zn) Cover Coat:Glass
Operatng Temperature	-55°C to 125°C Consult temperature rerating curve chart.
Thermal Shock	300 cycles -55°C to 125°C
Humidity	MIL-STD-202F, Method 103B,Condition D
Vibraton	Per MIL-STD-202F, Method 201A
Insulaton Resistance (Afer Opening)	Greater than 10,000 ohms
Resistance to Soldering Heat	MIL-STD-202G,Method 210F, Condition D

0.25A~8A 63Vdc/32Vdc

Time Current Curve

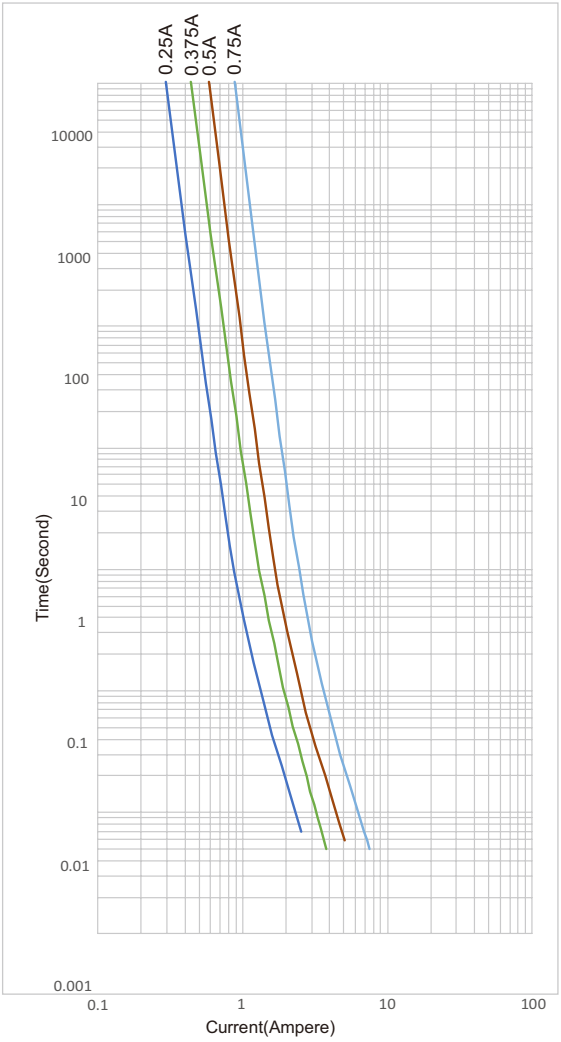

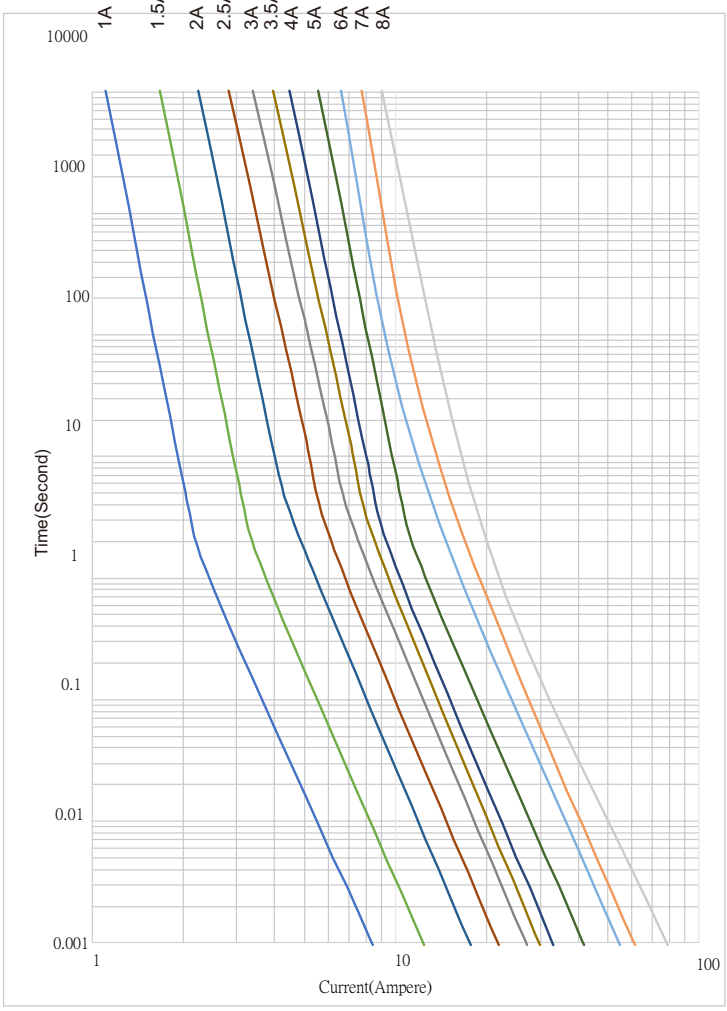

Packaging

5,000 pieces of fuses in plastic or paper taper 5000pcs)

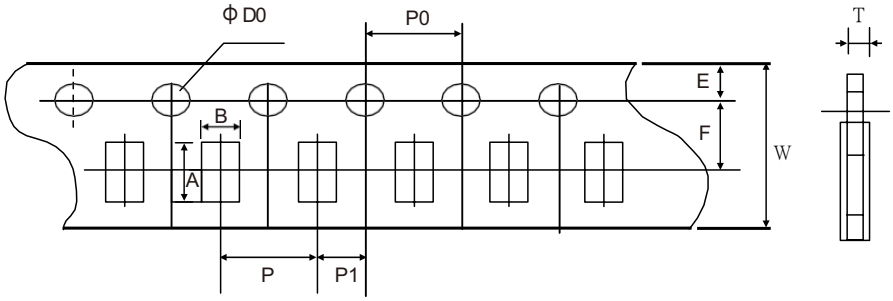

Type	A	B	W	F	E
Spec	1.85±0.10	1.10±0.10	8.00±0.10	3.50±0.05	1.75±0.10
Type	P	P0	P1	D0	T
Spec	4.00±0.10	4.00±0.10	2.00±0.05	1.50±0.10	0.65±0.10

(Unit: mm)