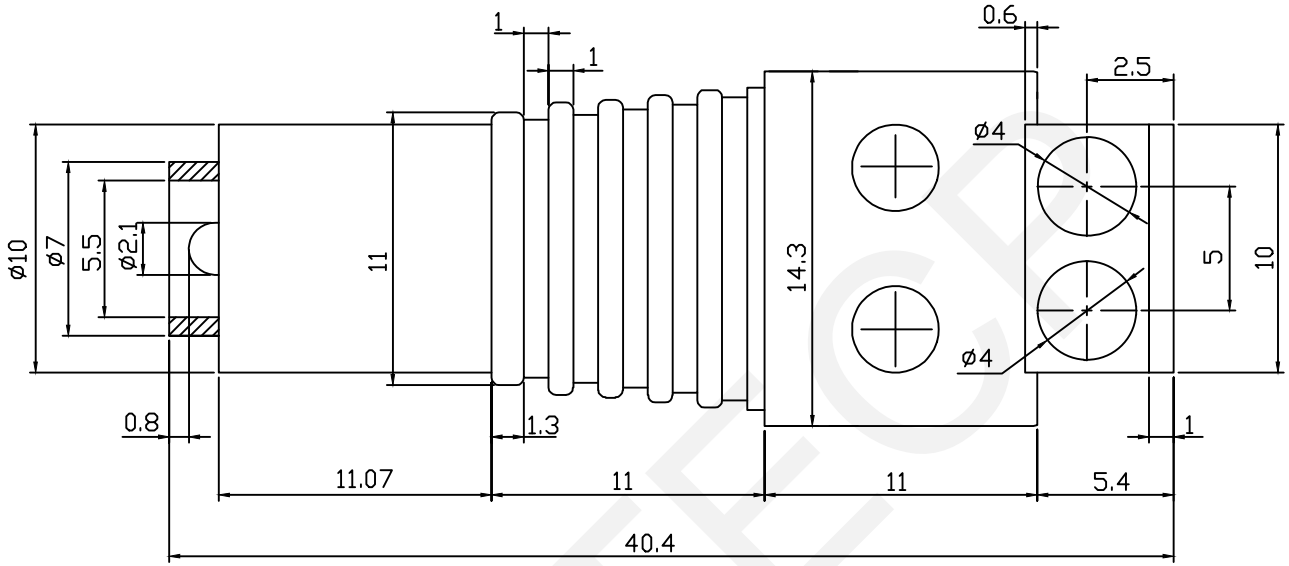

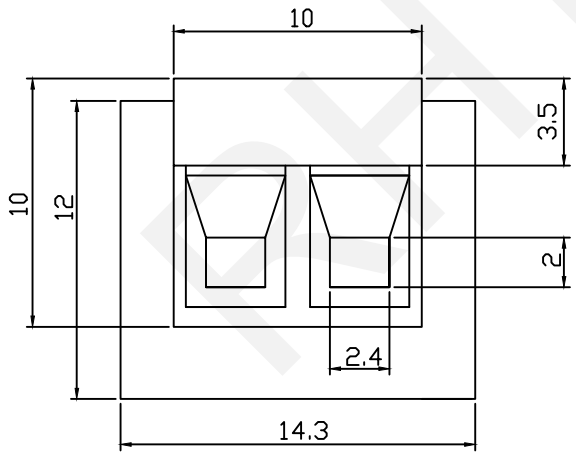

Material

Housing:ABS,Green

Screw:Iron,Nickel Plated

Terminal:Copper,Nickel Plated

Packing:5pcs/Bag

RHTECP NINGBO RHT ELECTRONIC CO.,LTD	UNITS:mm	SHEET SIZE: A4	SCALE:---	DRWN BY PAN	DC Power Jack Adapter Connector
	0~3	3~18	18~50	50~120	CHK'D BY FENG	THIRD ANGLE PROJECTION
	±0.12	±0.15	±0.3	±0.5	APPR BY ZHAN	RHTBYC-05-2.1F-IWP