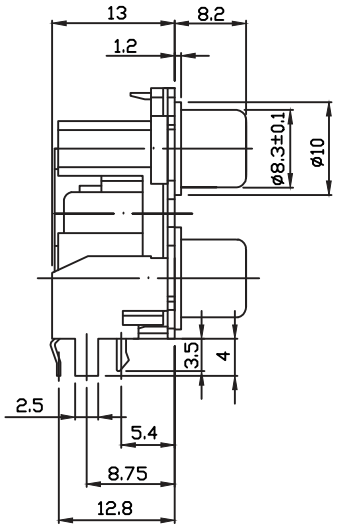

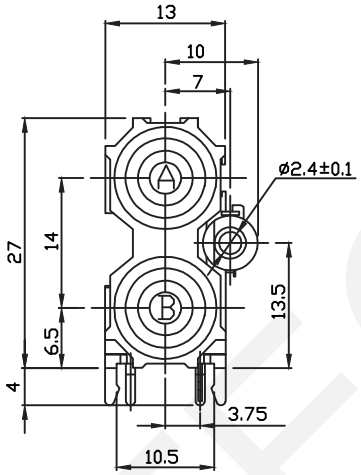

Electrical Specification:

Contact resistance:30mΩ Max

Insulation resistance:50MΩ Min at DC 500V

Withstand voltage:AC 500V(50Hz) 1min

Operating Temperature:-25°C~+85°C

Materials:

Sealed Plate : Brass

Terminal : Brass

Outer Contact : Brass

Washer : PBT UL94V~0

Cover : ABS UL94V~0

Housing : PBT UL94V~0

MODEL NO.	RHTAYCA-203
SCHEMATIC	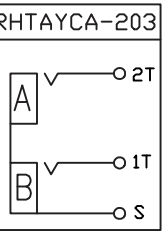

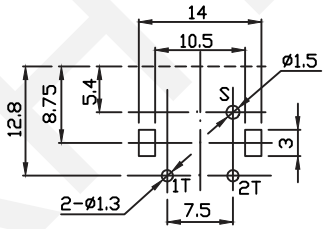

T:1.6 Dimensions of PC board holes

Tolerance:±0.1(Printed-bottom view)

ORDER INFORMATION

Product NO.: RHTAYCA-203-N-WH-YE

RCA Jack Type

G:Nickel Plated

Color:WH-YE:White-Yellow

RE-WH Red-White

WH-RE White-Red

RE-YE Red-Yellow

RHTECP

RHTECP NINGBO RHT ELECTRONIC CO.,LTD	UNITS:mm	SHEET SIZE: A4	SCALE:---	DRWN BY PAN	Metal R/A PCB Mount Dual RCA Jack
	0~3	3~18	18~50	50~120	CHK'D BY FENG	THIRD ANGLE PROJECTION
	±0.12	±0.15	±0.3	±0.5	APPR BY ZHAN	RHTAYCA-203-N-WH-YE