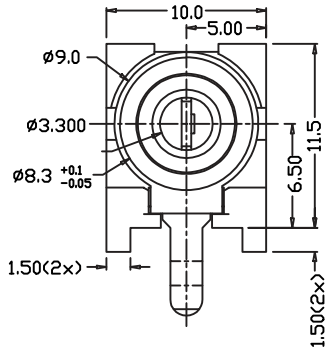

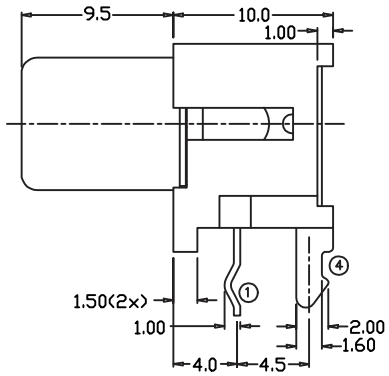

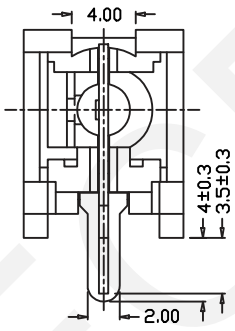

Electrical Specification:
Contact resistance:30mΩ Max
Insulation resistance:50MΩ Min at DC 500V
Withstand voltage:AC 500V(50Hz) 1min
Operating Temperature:-25°C~+85°C

Materials
Housing:PBT UL94V~0
Terminal 1:C R Steel
Terminal 4 :Brass

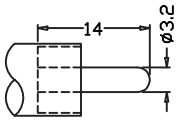

RCA MATE PLUG

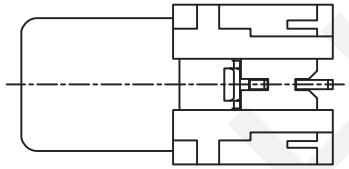

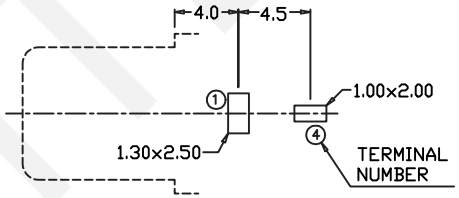

PCB LAYOUT
(BOTTOM VIEW)

ORDER INFORMATION
Product NO.: RHTAYCA-102-N-R

RCA Jack Type
N:Nickel Plated
Color: R Red ,B Black
Y Yellow , W White

MODEL NO.	RHTAYCA-102
SCHEMATIC	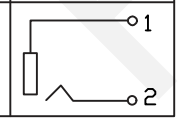

NINGBO RHT ELECTRONIC CO.,LTD	UNITS:mm	SHEET SIZE: A4	SCALE:---	DRWN BY PAN	RCA Jack PCB Mount Right Angle
	0~3	3~18	18~50	50~120	CHK'D BY FENG
	±0.12	±0.15	±0.3	±0.5	APPR BY ZHAN
	THIRD ANGLE PROJECTION				RHTAYCA-102-N-R