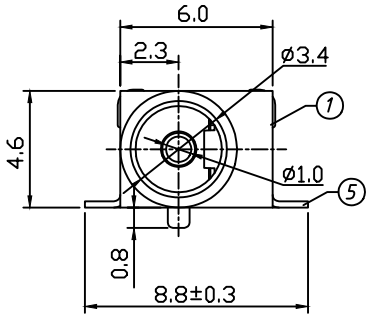

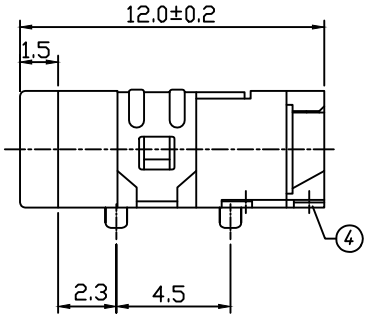

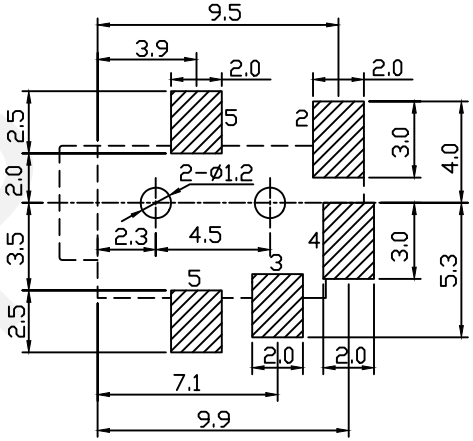

PCB LAYOUT TOP VIEW

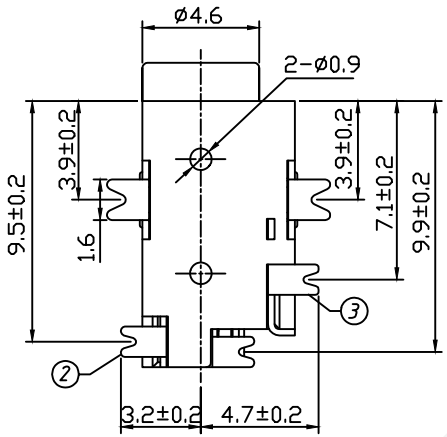

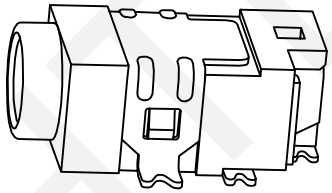

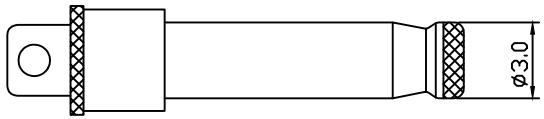

ø3.0xø1.1 DC POWER PLUG

SCHEMATIC

RHTAYDC-024	RHTAYDC-024-1
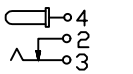	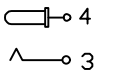

No	Description	QTY	Material	Plating
1	Housing	1	PA9T	---
2	Curve Piece	1	Brass	Ag-Plating
3	Spring	1	SUS301	Ag-Plating
4	PIN	1	Brass	Ag-Plating
5	Contact Foot	1	Brass	Ni-Plating

SPECIFICATION

Rated Load:DC 30V 0.5A

Contact Resistance:30mΩ, Max

Insulation Resistance:100MΩ, Min

Withstand Voltage:AC500V

Actuating Force:3-20N

Life:5000 Cycles

Operating Temperature:-30°C-70°C

RHTECP NINGBO RHT ELECTRONIC CO.,LTD	UNITS:mm	SHEET SIZE: A4	SCALE:---	DRWN BY PAN	DC POWER Jack SMT HORIZONTAL
	0~3	3~18	18~50	50~120	CHK'D BY FENG	THIRD ANGLE PROJECTION
	±0.12	±0.15	±0.3	±0.5	APPR BY ZHAN	RHTAYDC-024