RoHS Compliance

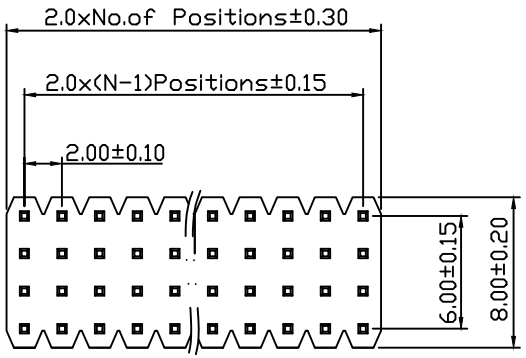

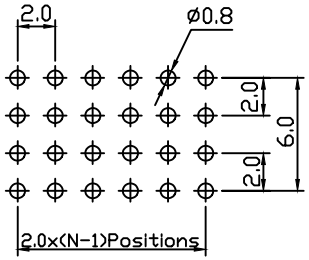

Recommended P.C.Board Layout
PCB TOLERANCE±0.05(TOP VIEW)

Material:
Standard: PA6T
Contact: Brass
Insulator:Polyester,UL94V-0
Electrical Characteristics:
Rated Current: 1.5AMP
Contact Resistance: 20mΩ Max
Withstand Voltage: 500V AC/DC
Insulator Resistance: 1000MΩ Min
Mechanical
Operating Temperature: -40°C~+105°C
Max.Processing Temp:230°C For30-60 Seconds(260°C For10 Seconds)

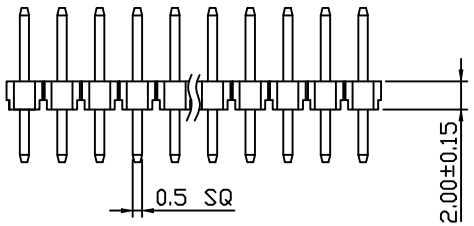

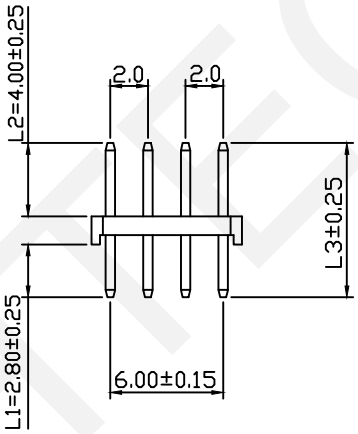

Order Information:
RHTAY07BG-2.00-4-XX-S-L1xL2xL3-G0

Pin Header Series
07BG:2.00mm
Plastics Height:
1.50mm,2.00mm
Per Row:Four Layer
Pin:No. Of Pins(04~160)
Type:Straight Pin
Size:L1xL2xL3
Plating:
G0=Gold Flash G1=1u" Gold
G10=10u" Gold G15=15u" Gold
G30=30u" Gold

Dimension Antitheses List (mm)				
ITEM	L1	L2	L3	Plastic Height
Standard	2.80	4.00	---	2.00
Nonstandard	---	---	---	---

RHTECP NINGBO RHT ELECTRONIC CO.,LTD	UNITS:mm	SHEET SIZE: A4	SCALE:---	DRWN BY PAN	2.00mm Pin Header Four Layer, Straight Pin 4xN Pin
	0~3	3~18	18~50	50~120	CHK'D BY FENG
	±0.12	±0.15	±0.3	±0.5	APPR BY ZHAN
	THIRD ANGLE PROJECTION				RHTAY07BG-2.00-4-XX-S-L1xL2xL3-G0

RHTECP

RoHS Compliance

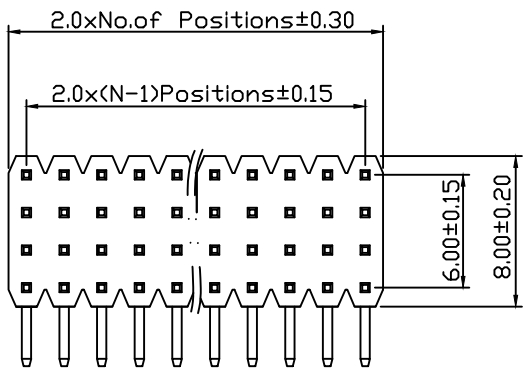

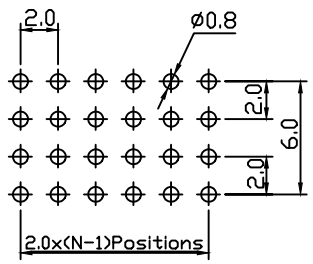

Recommended P.C.Board Layout
PCB TOLERANCE±0.05(TOP VIEW)

Material:
Standard: PA6T
Contact: Brass
Insulator:Polyester,UL94V-0
Electrical Characteristics:
Rated Current: 1.5AMP
Contact Resistance: 20mΩ Max
Withstand Voltage: 500V AC/DC
Insulator Resistance: 1000MΩ Min
Mechanical
Operating Temperature: -40°C~+105°C
Max.Processing Temp:230°C For30-60 Seconds(260°C For10 Seconds)

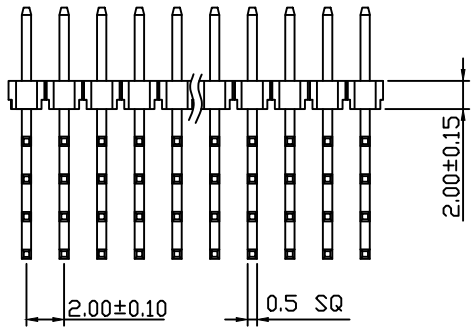

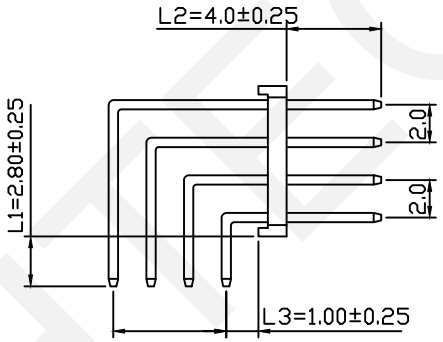

Order Information:
RHTAY07BG-2.00-4-XX-R1-L1xL2xL3-G0

Pin Header Series
07BG:2.00mm
Plastics Height:
1.50mm,2.00mm
Per Row:Four Layer
Pin:No. Of Pins(04~160)
Right Angle Pin:R1 Type
Size:L1xL2xL3
Plating:
G0=Gold Flash G1=1u' Gold
G10=10u' Gold G15=15u' Gold
G30=30u' Gold

Dimension Antitheses List (mm)				
ITEM	L1	L2	L3	Plastic Height
Standard	2.80	4.00	1.00	2.00
Nonstandard	---	---	---	---

RHTECP NINGBO RHT ELECTRONIC CO.,LTD	UNITS:mm	SHEET SIZE: A4	SCALE:---	DRWN BY PAN	2.00mm Pin Header Four Layer, Right Angle Pin ,4xN Pin
	0~3	3~18	18~50	50~120	CHK'D BY FENG
	±0.12	±0.15	±0.3	±0.5	APPR BY ZHAN
	THIRD ANGLE PROJECTION				RHTAY07BG-2.00-4-XX-R1-L1xL2xL3-G0