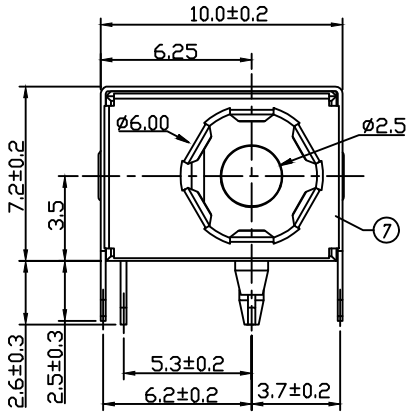

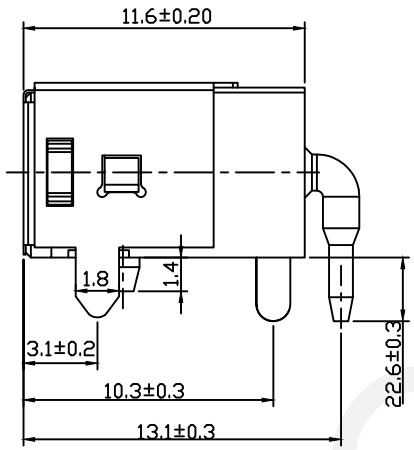

SPECIFICATION

Rated Load:DC 30V8A

Contact resistance:30mΩ, max

Insulation resistance:100MΩ, min

Withstand Voltage:AC500V

Actuating Force:3-20N

Life:5000 cycles

Operating Temperature:-30℃-70℃

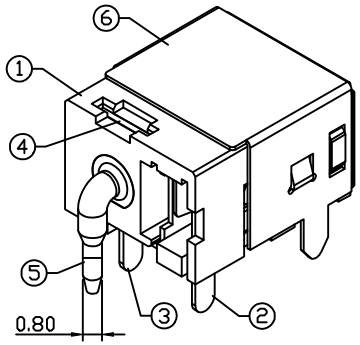

PCB Layout Top View

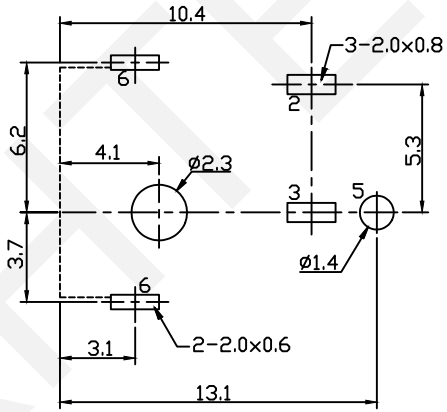

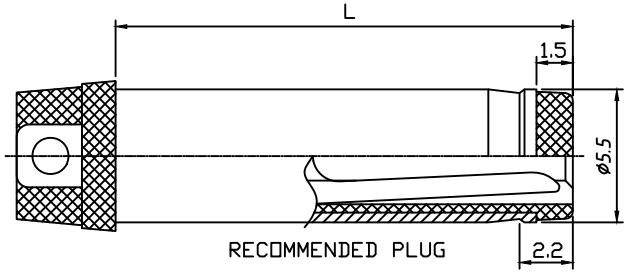

RECOMMENDED PLUG

SCHEMATIC

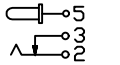

PIN	ø2.0	ø2.5
APPD		

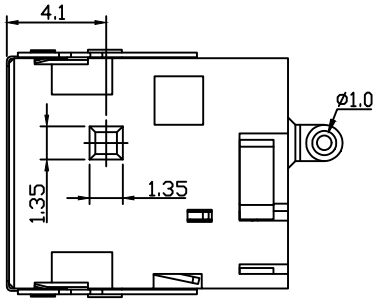

No.	Description	QTY	Material	Plating
1	Housing	1	LCP	---
2	Spring Piece	1	SUS301	Sn-Plating
3	Curve Piece	1	Brass	Sn-Plating
4	Stopper	1	SUS301	
5	PIN	1	Zinc	Ni-Plating
6	Coat	1	Bronze	Ni-Plating
7	Cover	1	SUS301	

RHTECP NINGBO RHT ELECTRONIC CO.,LTD

UNITS:mm	SHEET SIZE: A4	SCALE:---	DRWN BY PAN
0~3	3~18	18~50	50~120
±0.12	±0.15	±0.3	±0.5

CHK'D BY FENG

APPR BY ZHAN

DC POWER Jack DIP

THIRD ANGLE PROJECTION

RHTAYDC-018E

RHTECP