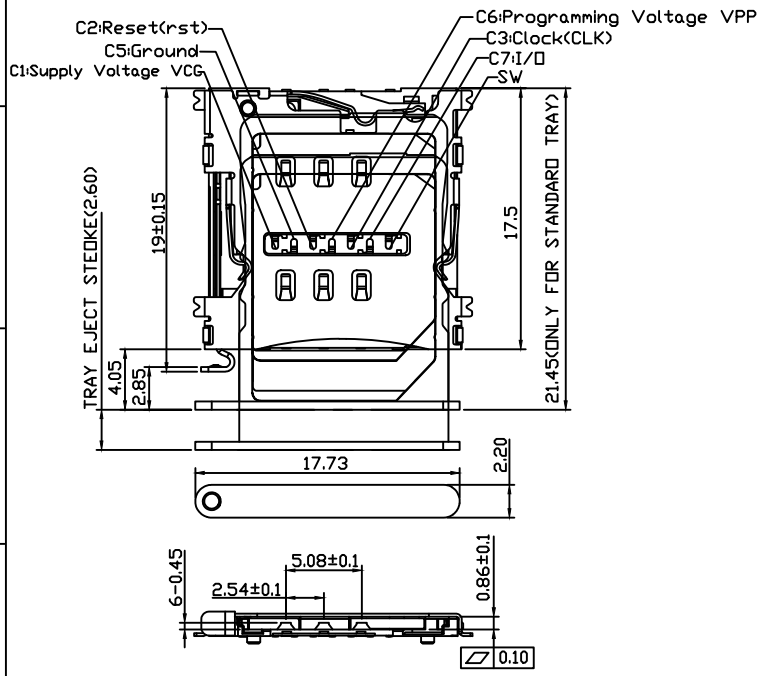

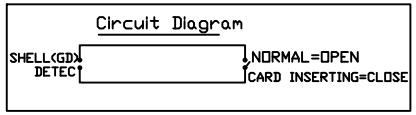

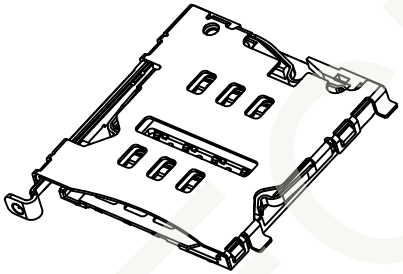

Material:

Insulator:Hi--Temperature Plastic,UL 94 V-0,Black.

Terminal:Copper Alloy.Gold Flash Plating on all Terminal,Aad 50u' min Nickel Underplated on allover

Shell:50u' Nickel Underplated on allover,Gold flash on solder pad.

Electrical:

Current Rating:0.5A

Voltage Rating Voltage:5.0 vrms

Insulation Resistance:1000MΩ Min./500V DC

Withstanding Voltage:250V ACrms For 1Minute

Contact Resistance:100mΩ Max.AT 10mA/20mV max.

Operating Temp.Range:-40℃ +85℃

Mating Cycles:5000 Insertions

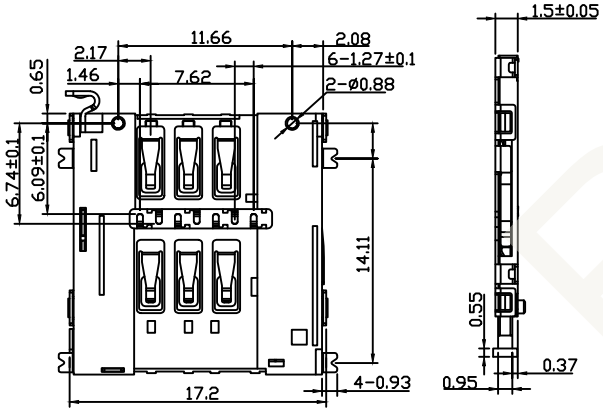

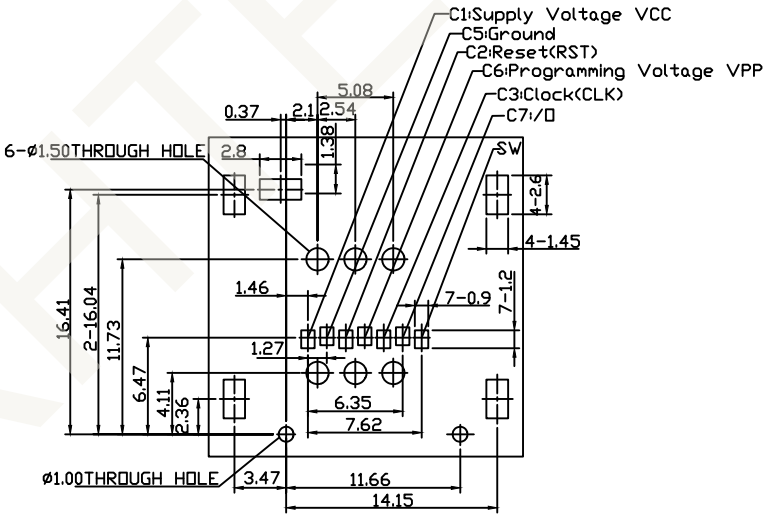

PCB LAYOUT
TOL:±0.05

RHTECP NINGBO RHT ELECTRONIC CO.,LTD	UNITS:mm	SHEET SIZE: A4	SCALE:---	DRWN BY PAN	Micro MICRO SIM CONN;Tray type;6Pin H1.5mm
	0~3	3~18	18~50	50~120	CHK'D BY FENG
	±0.12	±0.15	±0.3	±0.5	APPR BY ZHAN
	THIRD ANGLE PROJECTION				RHTAYIM-075-6P-H1.5-R