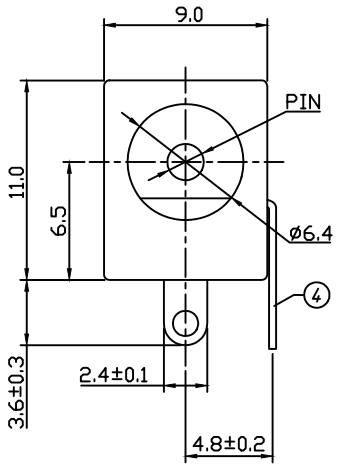

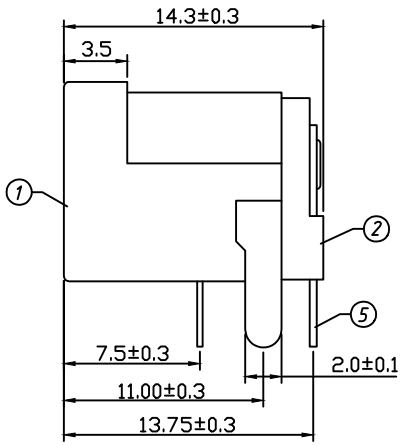

PCB Layout Top View

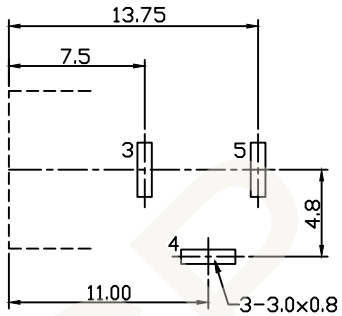

SPECIFICATION

Rated Load:DC 30V2A

Contact resistance:30mΩ, max

Insulation resistance:100MΩ, min

Withstand Voltage:AC500V

Actuating Force:3-20N

Life:5000 cycles

Operating Temperature:-30℃-70℃

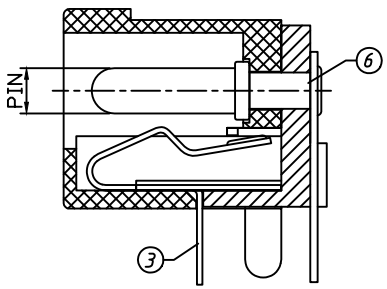

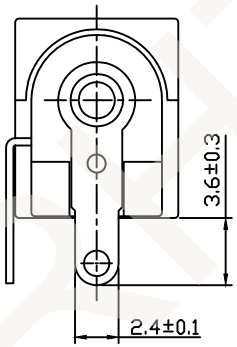

SCHEMATIC

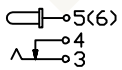

PIN	ø2.0	ø2.5
APPD		

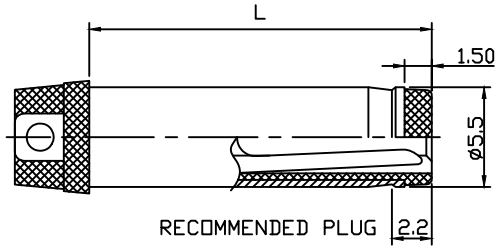

NO.	Description	QTY	Material	Plating
1	Housing	1	PBT	---
2	Cover	1	PBT	---
3	Spring Piece	1	Bronze	Sn-Plating
4	Curve Piece	1	Brass	Sn-Plating
5	Flat Foot	1	Brass	Sn-Plating
6	Pin	1	Brass	Ni-Plating

RHTECP® NINGBO RHT ELECTRONIC CO.,LTD

UNITS:mm	SHEET SIZE: A4	SCALE:---	DRWN BY PAN
0~3	3~18	18~50	50~120
±0.12	±0.15	±0.3	±0.5

CHK'D BY FENG

APPR BY ZHAN

THIRD ANGLE PROJECTION

30V 2A DC Jack DIP

RHTAY13DC-005

RHTECP