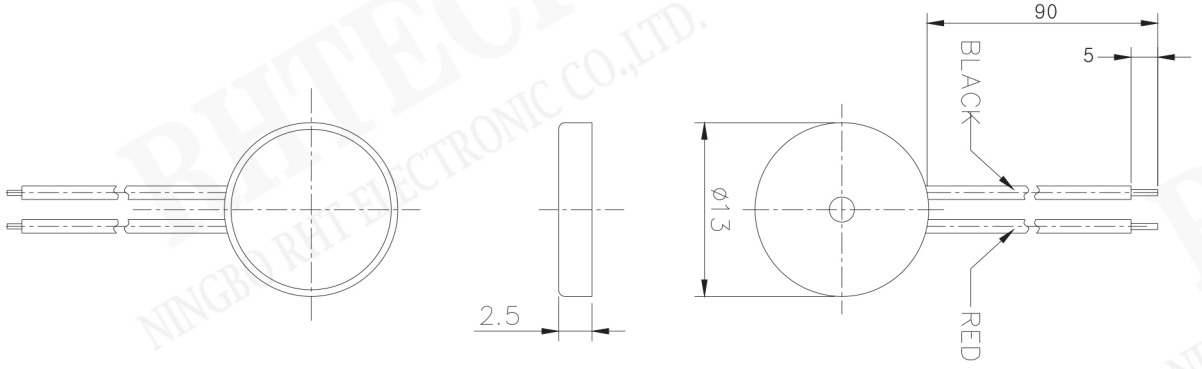

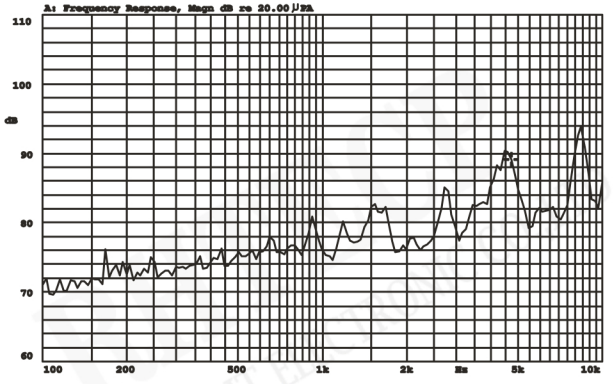


## Piezo Transducer Series

RE-B-LPT-13∗2. 5 Without Circuit Piezo Transducer Buzzer Series

| Order Code | RE-B-LPT-13*2.5-A | RE-B-LPT-13*2.5-B |
|---|---|---|
| Rated Voltage | 5Vp-p | 10Vp-p |
| Operating Voltage | 3…20Vp-p | 3…20Vp-p |
| Max. Rated Current | 2mA | 4mA |
| Resonant Frequency | 3.4±0.5KHz | 3.4±0.5KHz |
| Min.S.P.L.（@10cm） | 70dB | 80dB |
| Capacitance at 1,000Hz | 9000±30% pF | 15000±30% pF |
| Operating Temp | -20°C~+70°C | -20°C~+70°C |
| Weight | 0.6g | 0.6g |

## ORDER INFORMATION

Product No.: RE-B - LPT - 13∗2. 5-A

Part Number

Without Circuit Piezo Transducer Buzzer Series

Order Code

| | | | | |
|---|---|---|---|---|
| RHTECP NINGBO RHT ELECTRONIC CO.,LTD | UNITS:mm | SHEET SIZE:A4 | SCALE: --- | First angle projection |
| | > 0～3 | > 3～18 | > 18～50 | > 50～120 |
| | ± 0.12 | ± 0.15 | ± 0.3 | ± 0.5 |
| | | | | BUZZER |