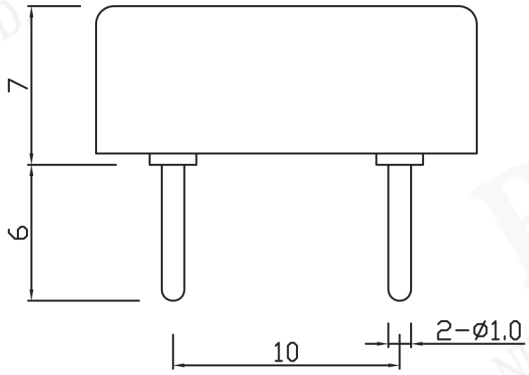

Piezo Transducer Series

RE-B-PT-17*08 Without Circuit Piezo Transducer Buzzer Series

Order Code	RE-B-PT-17*08-A	RE-B-PT-17*08-B
Rated Voltage	5Vp-p	9Vp-p
Operating Voltage	1...30Vp-p	1...30Vp-p
Max. Rated Current	1mA	2.5mA
Resonant Frequency	4.0±0.5KHz	4.0±0.5KHz
Min.S.P.L.（@10cm）	85dB	80dB
Capacitance at 1,000Hz	14000±30% Pf	14000±30% Pf
Operating Temp	-20℃~+70℃	-20℃~+70℃
Weight	1g	1g

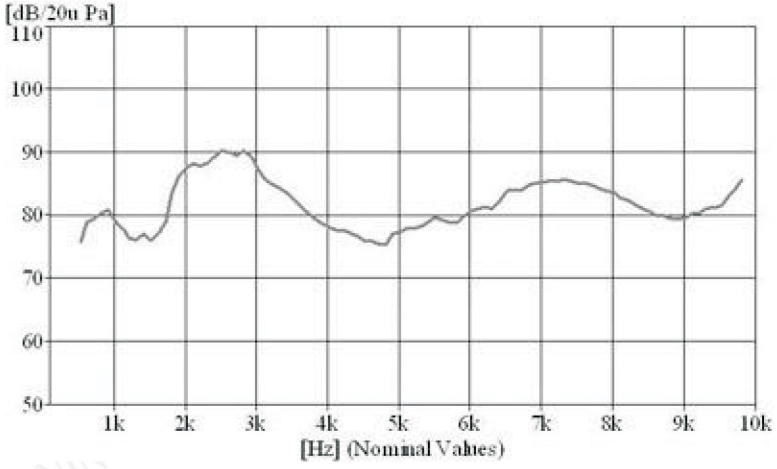

ORDER INFORMATION

Product No.: RE-B - PT - 17*08-A

- RE-B: Part Number
- PT: Without Circuit Piezo Transducer Buzzer Series
- 17*08-A: Order Code

RHTECP NINGBO RHT ELECTRONIC CO.,LTD	UNITS:mm	SHEET SIZE:A4	SCALE: ---		First angle projection
	> 0 ~ 3	> 3 ~ 18	> 18 ~ 50	> 50 ~ 120	BUZZER
	± 0.12	± 0.15	± 0.3	± 0.5	